PETROBRAS	LIST	No. I-LI-3010.2G-5400-940-KES-301	
	CLIENT: E & P		SHEET 1 of 12
	JOB: BUZIOS FIELD AREA DEVELOPMENT		
	AREA: PETROBRAS 78 (P-78)		
SRGE	TITLE: **AREA CLASSIFICATION DATA LIST (HULL)**		(I)
			SCP78

Keppel Shipyard / Hyundai Heavy Industries	5900.0117818.21.2		
	CONTRACTOR Nº -		
[File: MICROSOFT WORD/V.2003/I-LI-3010.2G-5400-940-KES-301_0]	TECH.RESP.:: Shravan Kamat	CREA Nº: -	INITIALS: -

INDEX OF REVISIONS

REV.	DESCRIPTION AND/OR REVISED SHEETS
0	FOR DESIGN

	REV. 0								
DATE	JUL/8/21								
DESIGN	KES								
EXECUTION	JHGu.HHI								
CHECK	YCChoi.HHI								
APPROVAL	C K Whye								

INFORMATION IN THIS DOCUMENT IS PROPERTY OF PETROBRAS, BEING PROHIBITED OUTSIDE OF THEIR PURPOSE

FORM OWNED TO PETROBRAS N-0381 REV. L

SUMMARY

1 SCOPE 3
2 APPLICABLE REGULATION, CODES AND STANDARDS 3
3 REFERENCES DOCUMENT 4
4 DESIGN REQUIREMENTS 4
4.1 General 4
4.2 Main products 5
4.3 Pure products properties 7
5 GENERAL NOTES 7
6 ANNEX 12

1 SCOPE

The objective of this document is to define the general design criteria required for the identification a hazardous area classification and produce a list limited to hull / accomodation / engine room / M15B equipment of the unit, which can generate an area classification. This document presents the required input data to Area Classification Drawings.

Detailed Design shall be developed in accordandce with the requirements herein established. Any modifications shall be submitted to previous PETROBRAS approval.

2 APPLICABLE REGULATION, CODES AND STANDARDS

The design criteria herein established are guidance for the application of the Standards and Recommendation included in this chapter, and/or as additional requirements.

- IMO-SOLAS: International Convention for the Safety of Life at Sea -1974, and amendments in force.
- IMO-MODU CODE: Code for the Construction and Equipment of Mobile Offshore Drilling Units - 2009, and amendments in force.
- IEC 60092-502: Electrical installations in ships.
- IEC-61892-7: Mobile and fixed offshore units - Electrical installations Part 7: Hazardous areas
- ABNT NBR IEC 60079-10: Explosive atmospheres - Part 10-1: Classification of areas - Explosive gas atmospheres
- API RP 505: Recommended Practice for Classification of Locations for Electrical Installations at Petroleum Facilities Classified as Class I, Zone 0, Zone 1, and Zone 2.
- Requirements of Classification Society of the Unit.
- DR-ENGP-M-I-1.3 - Safety Engineering Guideline

In case of conflict between any documents listed above, the most restrictive

requirement shall be met. In case of item in conflict with this document, PETROBRAS shall be consulted.

3 REFERENCES DOCUMENT

3.1.1 I-LI-3010.2G-1200-940-KES-302 – Hull Equipment List

3.1.2 I-DE-3010.2G-1351-942-KES-303 – Hull Deck Layout – Plan View

3.1.3 I-DE-3010.2G-1351-942-KES-304 – Hull Deck Layout – Elevation View

3.1.4 I-DE-3010.2G-1351-942-KES-305 – Hull Deck Layout – Section View

4 DESIGN REQUIREMENTS

4.1 General

4.1.1 The reasons for classifying the Installation into hazardous area are:

- Ensure that all sort of equipment is of an appropriate design for hazardous areas;
- Reduce to an acceptable level the probability of a flammable atmosphere coincident with a source of ignition;
- Assist the location for air inlets for ventilation system or combustion equipment;
- Identify areas where permit to work requirements are to be applied for hot work.

4.1.2 In addition, the design shall be developed to ensure the safety of the installation by:

- Minimizing the sources of flammable material release;
- Providing efficient ventilation to disperse any gas which may be released;
- Minimizing the ignition potential of any equipment located in a hazardous area.

4.1.3 The Groups, defined according to IEC 60079-0, applicable to the hazardous materials handled in the Installation shall be as follows:

Table 1. Group and its representative gases

Group	Gas or vapor
IIC	Acetylene, Hydrogen
IIB	Paint, H_2S
IIA	Methane, Propane, Benzene, Pentene, TEG

4.1.4 The temperature class, defined according to IEC 60079-0 shall be as follows:

Table 2. Temperature classes

Temperature Class	Maximum Surface
T1	450 °C
T2	300 °C
T3	200 °C
T4	135 °C
T5	100 °C
T6	85 °C

4.1.5 Symbols for the temperature classes marked on electrical equipment shall have the meaning given in Table 3:

Table 3. – Relationship between gas or vapour ignition temperature and temperature class of equipment (IEC 60079-14)

Temperature class required by the area classification	Ignition temperature of gas or vapour in °C	Allowable temperature classes of equipment
T1	> 450 °C	T1 – T6
T2	> 300 °C	T2 – T6
T3	> 200 °C	T3 – T6
T4	> 135 °C	T4 – T6
T5	> 100 °C	T5 – T6
T6	> 85 °C	T6

4.2 Main products

4.2.1 Natural Gas:

Natural gas is likely to be associated with the produced crude oil. Natural gas contains methane, ethane, propane, butane etc. Natural gas is classified in the gas Group IIA. Many of the chemical components have a temperature class of T2 or T3. Therefore, natural gas is specified as T3, in a conservative approach.

4.2.2 Crude oil and condensate:

Oil vapour is classified in gas Group IIA, Temperature Class T3.

4.2.3 Hydrogen:

Hydrogen gas could be released in the battery rooms. Hydrogen is classified in gas Group IIC, Temperature Class T1.

4.2.4 Diesel:

Marine Diesel fuel has a flash point higher than 60°C. If stored and handled at temperature lower than 60°C, it does not create any hazardous area.

4.2.5 Chemicals and QAV:

Chemicals products, when they are flammable, are classified in gas Group IIA, Temperature Class T3, as well as QAV. Flammability of chemical products is presented in Table 3.

Table 3. Flammability of chemical products

CHEMICAL PRODUCT	FLAMMABILITY
PH controller	No
Foam inhibitor	Yes
Biocide	No
Anti-scalant	No
O_2 scavenger	No
SRU cleaning	No
Demulsifier	Yes
Scale inhibitor	No
Hydrate inhibitor	Yes
H_2S scavenger	Yes
Asphaltene inhibitor	Yes
Gas corrosion inhibitor	Yes
Inverted emulsion inhibitor	No
Wax inhibitor	Yes

4.3 Pure products properties

4.3.1 The following table gives the pure product properties for the hazardous materials handled in the installation.

Table 4. Pure products properties

Product Pure Name	Mol weight (g/mol)	Boiling Point (°C)	Flash Point (°C)	Auto Ignition temp. (°C)	Flammable Limits		Density		Group (IEC)	Temp Class (IEC)
					LFL (%)	UFL (%)	Liq.	Gas		
Methane	16	-162	gas	537	5	15	-	0.6	IIA	T1
Ethane	30	-89	gas	472	3	12.5	-	1	IIA	T1
Propane	44	-42	gas	450	2.1	9.5	-	1.6	IIA	T2
i-Butane	58	-12	gas	460	1.8	8.4	-	2	IIA	T1
n-Butane	58	-1	-60	288	1.9	8.5	-	2	IIA	T3
i-Pentane	72	28	<-51	420	1.4	7.6	0.6	2.2	IIA	T2
n-Pentene	72	36	<-40	260	1.5	7.8	0.6	2.5	IIA	T2
n-Hexane	86	69	-31	225	1.2	7.5	0.66	2.8	IIA	T3
n-Heptene	100	98	-4	215	1.1	6.7	0.68	3.5	IIA	T3
n-Octane	114	126	13	206	1	6.5	0.7	3.9	IIA	T3
n-Nonane	128	151	31	205	0.8	2.9	0.7	4.4	IIA	T3
n-Decane	142	174	46	210	0.8	5.4	0.7	4.9	IIA	T3
n-Undecane	166	196	66	NA	NA	NA	0.74	5.4	IIA	NA
n-C12+	170	216	163	203	0.6	NA	0.8	5.9	IIA	T3
H_2	2	-253	gas	500	4	76	-	0.1	IIC	T1

5 GENERAL NOTES

5.1 All equipment to be used in hazardous areas shall be approved by a recognized institution and designed according to recognized codes/standards. Certifying requirements for equipment and materials shall also comply with Classification Society requirements.

5.2 Area classification shall comply with the applicable Standards and recommendations, listed in section 2. In case of items in conflict between Standards it shall be used the most stringent requirement and these items shall be clearly identified in the present document.

5.3 Any piece of equipment located in an open area which is to remain energized during a level 3 emergency Shutdown (ESD-3) shall be suitable, at least, for areas classified as Zone 2, Group IIA and Temperature Class T3, even if located in a non-classified area, unless it can be automatically de-energized in the presence of gas in the respective area.

5.4 Battery Rooms are to be classified as Zone 1, Group IIC and Temperature Class T1. These rooms shall be provided with negative pressurization and their ventilation outlets shall classify the area around them as Zone 2 up to 3.0 m. The lighting fixtures installed inside battery room shall be certified for Zone 1, group IIC, T1. Inside Battery Rooms, it shall not be installed light switches, power plugs or other devices that may generate sparks. The area around their doors shall be classified as Zone 1 up to 1.5 m and Zone 2 up to 3.0 m. Engine starting batteries, depending on their capacities, shall be considered as non-hazardous. These batteries are to be installed in the same space where the engine is installed and are to be located close to the engine.

5.5 The non-hazardous compartments with direct access to a Zone 2 hazardous area shall be fitted with self-closing gas tight doors opening into the non-hazardous side. Furthermore, the non-hazardous compartments shall be provided with positive pressurization in relation to the hazardous area. Pressurization total failure shall cause an alarm at the Central Control Room. Alternatively, the installation of an air-lock as a mean of access, with respective ventilation/pressurization complying with the above requirements, may also be used.

5.6 Detailed Design shall consider the area classification around hatches, vents, valves and instruments originated from the process areas.

5.7 Laboratory fume hoods shall be classified as Zone 1, Group IIA and Temperature Class T3. The area surrounding fume hood ventilation outlets shall be classified as Zone 1 up to 1.5 m and Zone 2 up to 3.0 m.

5.8 Inside machinery hoods, with the ventilation system in operation, it shall be classified for electrical installations as Zone 2, Group IIA and Temperature Class T3. All electrical apparatus located inside the hood shall be suitable for operation in such an area, and those which remain energized after the ventilation system shutdown shall be suitable for operation in Zone 1. Hood exhaust ventilation outlets shall be classified as Zone 2 up to 3.0 m. The air intakes for combustion and/or ventilation system shall be located, at least, 3.0 m away from any classified area. The air intakes location shall be evaluated in Gas Dispersion Study.

5.9 The area around combustible liquid storage tank vents (e.g., diesel fuel) are classified as Zone 2, Group IIA and Temperature Class T3 up to 0.5 m (according to API RP 505 item 8.2.1.3), wherever combustible liquid is stored at higher temperatures than its flash point, as shown in Figure 1.

Figure 1. Combustible liquid storage tank in a non-enclosed adequately ventilated area

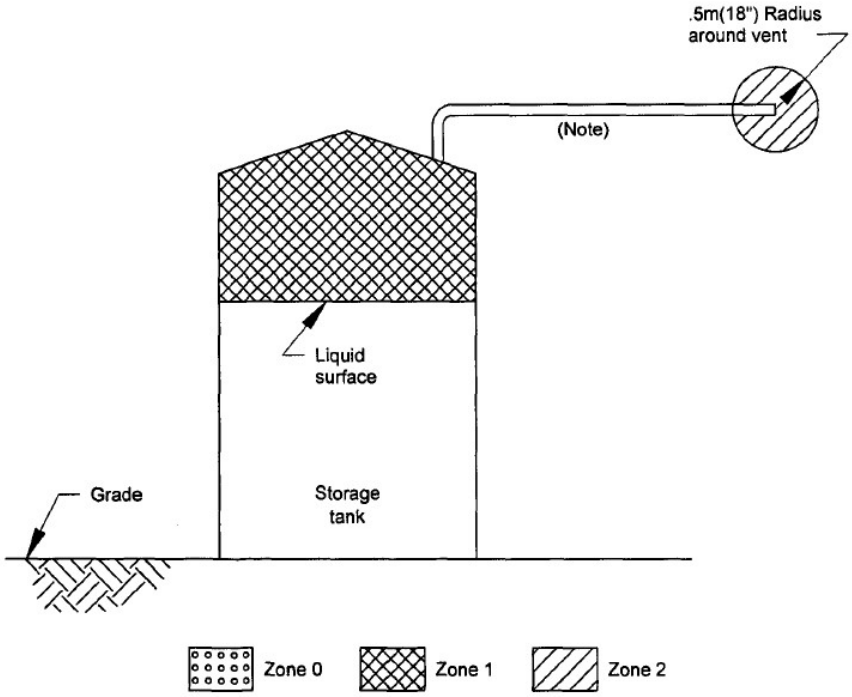

Note:

The interior of the vent piping is Zone 1. Cross hatching has been omitted for drawing clarity.

5.10 The area around a hydrocarbon pressure vessel (e.g., separators, glycol contactor, filters, heat exchangers) in non enclosed area is classified as figure bellow (API-RP-505 item 10.6.3.1).

Figure 2. Hydrocarbon pressure vessel or protected fired vessel in a non-enclosed adequately ventilated area

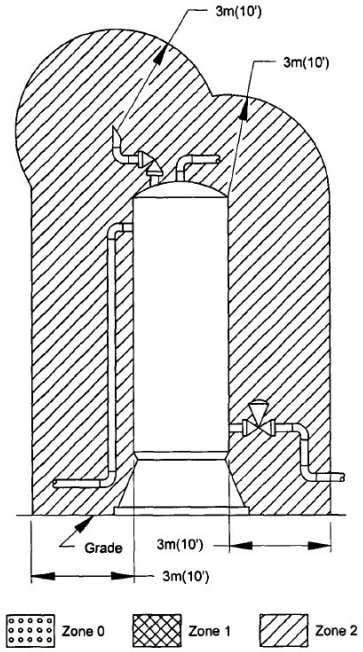

5.11 The area around an installation for pig launchers and receivers shall be classified as figure bellow (API-RP-505 item 10.6.6.1.3):

Figure 3. Pig Launching or Receiving Installation in a non-enclosed adequately ventilated area

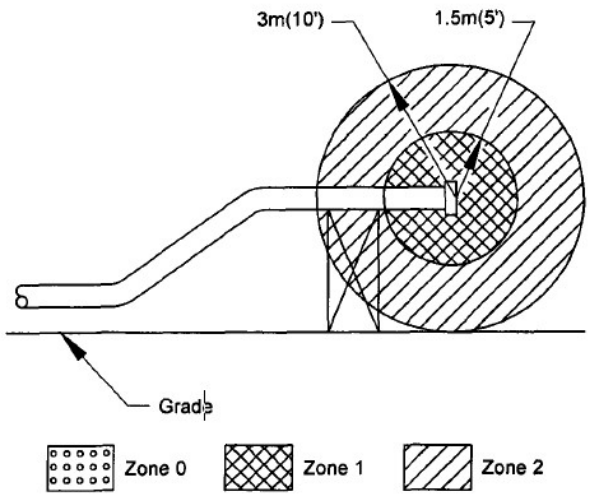

5.12 The drip pans that operate with flammable fluids are classified in accordance with figure bellow (API-RP-505 item 10.13.3.2):

Figure 4. Open drain system in a non-enclosed area

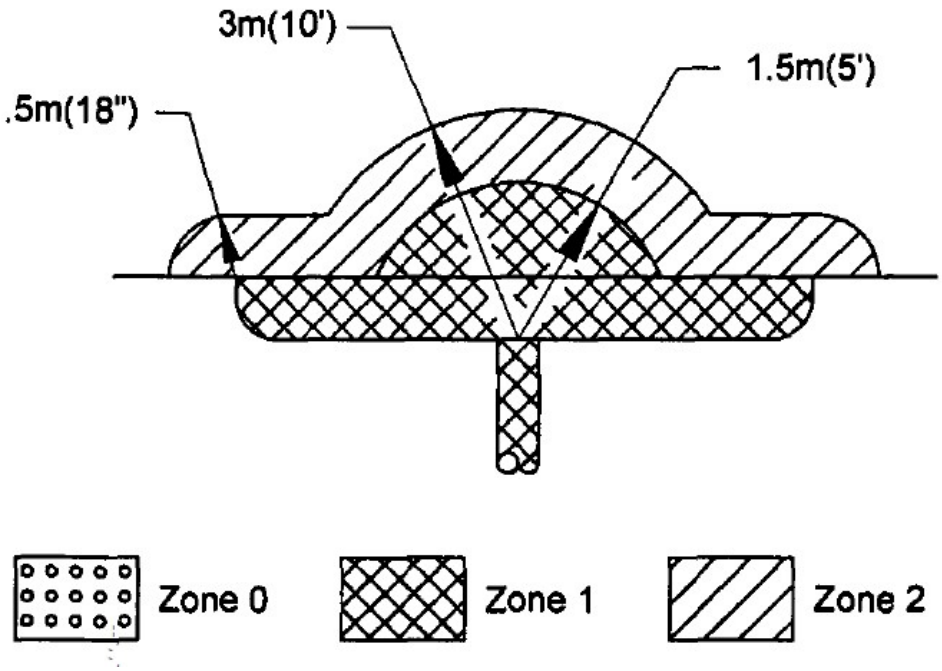

5.13 Piping containing hydrocarbons on pipe racks in utility areas is considered to be continuously welded and non hazardous. This is to be reviewed in the Detailed Design.

5.14 The electro-chlorination unit is considered non-hazardous, since the generated hydrogen is diluted with a high flow air, and in case of dilution fans failure, the unit shall automatically shutdown.

5.15 The volume between the Process Deck and Main Deck is defined a semi-enclosed space, and so, it shall be classified as Zone 1, Group IIA, Temperature Class T3.

5.16 Equipment data that is not available in Area Classification Data List Table (Annex I) shall be confirmed by Detailed Design.

5.17 The Painting workshop and Paint Store, inadequately ventilated enclosed areas where flammable or combustible paint products are used are classified as Zone 1 to the extent of the area, Group IIB, Temperature Class T3, in accordance with API RP 505 item 8.2.7.3.5 (paint workshop) and 11.22 (paint store) .

5.18 Doors opening shall be classified as per API RP 505 item 6.5.4.4 and 6.5.5.5.

5.19 Adequately ventilated enclosed areas where flammable and combustible paint products are stored in sealed containers (original containers or equivalent) are unclassified, in accordance with API RP 505 item 8.2.7.2.3.

6 ANNEX

ANNEX I

Area Classification Data List (Hull) - Table

Area Classification
Data List (Hull) - Ta

AREA CLASSIFICATION DATA LIST (HULL) TABLE
(I-LI-3010.2G-5400-940-KES-301_0 - ANNEX)

EQUIPMENT			FLAMMABLE MATERIAL	CAPACITY	TEMPERATURE	PRESSURE	VENTILATION	SOURCE OF LEAKAGE		HORIZONTAL DISTANCE (m)			TEMPERATURE CLASS AND GROUP	REMARKS
TAG	DESCRIPTION	LOCATION						DESCRIPTION	GRADE	ZONE 0	ZONE 1	ZONE 2		
RISERS	Risers area	UPPER RISER BALCONY	Crude Oil / gas	(See General Note 5.16)	(See General Note 5.16)	(See General Note 5.16)	Natural	Flanges, valves	Secondary	-	-	R = 3,0 m	T3, Group IIA	API RP 505 - Item 10.5
Z-5133503	REFUELING TANKS SKID	M-14	QAV	10400 L	Design max: 60 °C;	Design max: 4.04 kgf/cm^2;	Natural	Flanges, nozzles, valves	Secondary	-	-	3.0 m	T3, Group IIA	API RP 505 - item 14.3.2
B-5111002	START-UP SEA WATER LIFT PUMP	MAIN DECK	Water	Design max flow rate: 200 m³/h;	Design max: 57 °C;	Differential pressure: 897 kPa;	Natural	-	-	-	-	-	-	Fluid not flammable.
FT-5111002	START-UP SEA WATER LIFT FILTER	MAIN DECK	Water	Design max flow rate: 200 m³/h;	Design max: 57 °C;	Design max: 1701 kPa-a;	Natural	-	-	-	-	-	-	Fluid not flammable.
FT-5336002A/B	CLASSIFIED AREA - OPEN DRAIN - FILTER	MAIN DECK	Water	Design max flow rate: 2210.0 m³/h;	Design max: 70 °C;	Design max: 345 kPa-g; Design min: 345 kPa-g;	Natural	Flanges, nozzles, valves	Secondary	-	-	3.0 m	-	API RP 505 - item 10.6.3.1
UD-5122501A/C	FRESH WATER MAKER	MAIN DECK	Water	(See General Note 5.16)	Design max: 115 °C;	(See General Note 5.16)	Natural	-	-	-	-	-	-	Fluid not flammable.
UE-5121501	SEA WATER ELECTROCHLORINATIO N UNIT	MAIN DECK	Hydrogen	Design max flow rate: 77 m³/h;	Design max: 57 °C;	Design max: 1701 kPa-a;	Natural	Vent	Secondary	-	-	R = 3,0 m	-	API RP 505 - item 8.2.1.1.1
V-5336501	SLOP VESSEL	MAIN DECK	Crude Oil	Volume (total): 30 m³	Design max: 115 °C;	Design max: 340 kPa-g;	Natural	Flanges, nozzles, valves	Secondary	-	-	R = 3,0 m	T3, Group IIA	This equipment is located in main deck, which is Zone 1.
Z-5122502	FRESH WATER CHLORINATION UNIT	MAIN DECK	Water	(See General Note 5.16)	Design max: 60 °C;	(See General Note 5.16)	Natural	-	-	-	-	-	-	Fluid not flammable.
B-5111001A/G	SEA WATER LIFT PUMP	MAIN DECK	Water	Design max flow rate: 3000 m³/h;	Design max: 57 °C;	Differential pressure: 897 kPa;	Natural	-	-	-	-	-	-	Fluid not flammable.
B-5336501A/B	SLOP VESSEL PUMP	MAIN DECK	Crude Oil	Design max flow rate: 199 m³/h;	Design max: 115 °C;	(See General Note 5.16)	Natural	Flanges, seals	Secondary	-	-	R = 3,0 m	T3, Group IIA	API RP 505 - item 10.9.1
FT-5111001A/E	SEA WATER LIFT FILTER	MAIN DECK	Water	Design max flow rate: 4500 m³/h;	Design max: 57 °C;	Design max: 1701 kPa-a;	Natural	-	-	-	-	-	-	Fluid not flammable.
AQ-5271501	BUTTERWORTH HEATER	MAIN DECK	Water	17 MW	Design shell max: 200 °C;	Design shell max: 2630 kPag;	Natural	-	-	-	-	-	-	Fluid not flammable.
GN-Z-1359506-01	OFFLOADING HOSE REEL (FWD)	FORECASTLE	Stabilized Crude Oil	(See General Note 5.16)	Design max: 82 °C;	Design max: 302.852 kgf/cm^2;	Natural	Flanges, nozzles, valves	Secondary	-	1.5 m	3.0 m	T3, Group IIA	Around the Cargo Oil Hose Reel Zone 2 - Inside Coaming and 3 m surrounding the outer edge of the coaming up to a height of 2.4 m;
GN-Z-1359502-01	OFFLOADING HOSE REEL (AFT)	MAIN DECK	Stabilized Crude Oil	(See General Note 5.16)	Design max: 82 °C;	Design max: 302.852 kgf/cm^2;	Natural	Flanges, nozzles, valves	Secondary	-	1.5 m	3.0 m	T3, Group IIA	Around the Cargo Oil Hose Reel Zone 2 - Inside Coaming and 3 m surrounding the outer edge of the coaming up to a height of 2.4 m;
TQ-1358501C	NO. 1 CENTRAL CARGO OIL TANK	HULL	Stabilized Crude Oil	25414.8 m³	Design max: 80 °C;	Design max: 0.24 kgf/cm^2; Design min: -0.07 kgf/cm^2;	Mechanical	Vent, hatches	Primary	Inside tank	-	-	T3, Group IIA	Zone 0 inside tank Classified due to API RP 505 Fig.90
TQ-1358501P	NO. 1 CARGO OIL TANK (PS)	HULL	Stabilized Crude Oil	19530.6 m³	Design max: 80 °C;	Design max: 0.24 kgf/cm^2; Design min: -0.07 kgf/cm^2;	Mechanical	Vent, hatches	Primary	Inside tank	-	-	T3, Group IIA	Zone 0 inside tank Classified due to API RP 505 Fig.90
TQ-1358501S	NO. 1 CARGO OIL TANK (SB)	HULL	Stabilized Crude Oil	19530.6 m³	Design max: 80 °C;	Design max: 0.24 kgf/cm^2; Design min: -0.07 kgf/cm^2;	Mechanical	Vent, hatches	Primary	Inside tank	-	-	T3, Group IIA	Zone 0 inside tank Classified due to API RP 505 Fig.90
TQ-1358502C	NO. 2 CENTRAL CARGO OIL TANK	HULL	Stabilized Crude Oil	25414.8 m³	Design max: 80 °C;	Design max: 0.24 kgf/cm^2; Design min: -0.07 kgf/cm^2;	Mechanical	Vent, hatches	Primary	Inside tank	-	-	T3, Group IIA	Zone 0 inside tank Classified due to API RP 505 Fig.90
TQ-1358503C	NO. 3 CENTRAL CARGO OIL TANK	HULL	Stabilized Crude Oil	29045.5 m³	Design max: 80 °C;	Design max: 0.24 kgf/cm^2; Design min: -0.07 kgf/cm^2;	Mechanical	Vent, hatches	Primary	Inside tank	-	-	T3, Group IIA	Zone 0 inside tank Classified due to API RP 505 Fig.90
TQ-1358503P	NO. 3 WING CARGO OIL TANK (PS)	HULL	Stabilized Crude Oil	22320.7 m³	Design max: 80 °C;	Design max: 0.24 kgf/cm^2; Design min: -0.07 kgf/cm^2;	Mechanical	Vent, hatches	Primary	Inside tank	-	-	T3, Group IIA	Zone 0 inside tank Classified due to API RP 505 Fig.90
TQ-1358503S	NO. 3 WING CARGO OIL TANK (SB)	HULL	Stabilized Crude Oil	22320.7 m³	Design max: 80 °C;	Design max: 0.24 kgf/cm^2; Design min: -0.07 kgf/cm^2;	Mechanical	Vent, hatches	Primary	Inside tank	-	-	T3, Group IIA	Zone 0 inside tank Classified due to API RP 505 Fig.90
TQ-1358504C	NO. 4 CENTRAL CARGO OIL TANK	HULL	Stabilized Crude Oil	29045.5 m³	Design max: 80 °C;	Design max: 0.24 kgf/cm^2; Design min: -0.07 kgf/cm^2;	Mechanical	Vent, hatches	Primary	Inside tank	-	-	T3, Group IIA	Zone 0 inside tank Classified due to API RP 505 Fig.90

AREA CLASSIFICATION DATA LIST (HULL) TABLE
(I-LI-3010.2G-5400-940-KES-301_0 - ANNEX)

EQUIPMENT			FLAMMABLE MATERIAL	CAPACITY	TEMPERATURE	PRESSURE	VENTILATION	SOURCE OF LEAKAGE		HORIZONTAL DISTANCE (m)			TEMPERATURE CLASS AND GROUP	REMARKS
TAG	DESCRIPTION	LOCATION						DESCRIPTION	GRADE	ZONE 0	ZONE 1	ZONE 2		
TQ-1358504P	NO. 4 WING CARGO OIL TANK (PS)	HULL	Stabilized Crude Oil	22320.7 m³	Design max: 80 °C;	Design max: 0.24 kgf/cm^2; Design min: -0.07 kgf/cm^2;	Mechanical	Vent, hatches	Primary	Inside tank	-	-	T3, Group IIA	Zone 0 inside tank Classified due to API RP 505 Fig.90
TQ-1358504S	NO. 4 WING CARGO OIL TANK (SB)	HULL	Stabilized Crude Oil	22320.7 m³	Design max: 80 °C;	Design max: 0.24 kgf/cm^2; Design min: -0.07 kgf/cm^2;	Mechanical	Vent, hatches	Primary	Inside tank	-	-	T3, Group IIA	Zone 0 inside tank Classified due to API RP 505 Fig.90
TQ-1358505C	NO. 5 CENTRAL CARGO OIL TANK	HULL	Stabilized Crude Oil	29045.5 m³	Design max: 80 °C;	Design max: 0.24 kgf/cm^2; Design min: -0.07 kgf/cm^2;	Mechanical	Vent, hatches	Primary	Inside tank	-	-	T3, Group IIA	Zone 0 inside tank Classified due to API RP 505 Fig.90
TQ-1358505P	NO. 5 WING CARGO OIL TANK (PS)	HULL	Stabilized Crude Oil	22320.7 m³	Design max: 80 °C;	Design max: 0.24 kgf/cm^2; Design min: -0.07 kgf/cm^2;	Mechanical	Vent, hatches	Primary	Inside tank	-	-	T3, Group IIA	Zone 0 inside tank Classified due to API RP 505 Fig.90
TQ-1358505S	NO. 5 WING CARGO OIL TANK (SB)	HULL	Stabilized Crude Oil	22320.7 m³	Design max: 80 °C;	Design max: 0.24 kgf/cm^2; Design min: -0.07 kgf/cm^2;	Mechanical	Vent, hatches	Primary	Inside tank	-	-	T3, Group IIA	Zone 0 inside tank Classified due to API RP 505 Fig.90
TQ-1358506C	NO. 6 CENTRAL CARGO OIL TANK	HULL	Stabilized Crude Oil	25414.8 m³	Design max: 80 °C;	Design max: 0.24 kgf/cm^2; Design min: -0.07 kgf/cm^2;	Mechanical	Vent, hatches	Primary	Inside tank	-	-	T3, Group IIA	Zone 0 inside tank Classified due to API RP 505 Fig.90
TQ-1358506P	NO. 6 WING CARGO OIL TANK (PS)	HULL	Stabilized Crude Oil	19530.6 m³	Design max: 80 °C;	Design max: 0.24 kgf/cm^2; Design min: -0.07 kgf/cm^2;	Mechanical	Vent, hatches	Primary	Inside tank	-	-	T3, Group IIA	Zone 0 inside tank Classified due to API RP 505 Fig.90
TQ-1358506S	NO. 6 WING CARGO OIL TANK (SB)	HULL	Stabilized Crude Oil	19530.6 m³	Design max: 80 °C;	Design max: 0.24 kgf/cm^2; Design min: -0.07 kgf/cm^2;	Mechanical	Vent, hatches	Primary	Inside tank	-	-	T3, Group IIA	Zone 0 inside tank Classified due to API RP 505 Fig.90
TQ-1358507C	NO. 7 CENTRAL CARGO OIL TANK	HULL	Stabilized Crude Oil	27230.1 m³	Design max: 80 °C;	Design max: 0.24 kgf/cm^2; Design min: -0.07 kgf/cm^2;	Mechanical	Vent, hatches	Primary	Inside tank	-	-	T3, Group IIA	Zone 0 inside tank Classified due to API RP 505 Fig.90
TQ-1358507P	NO. 7 WING CARGO OIL TANK (PS)	HULL	Stabilized Crude Oil	12555.4 m³	Design max: 80 °C;	Design max: 0.24 kgf/cm^2; Design min: -0.07 kgf/cm^2;	Mechanical	Vent, hatches	Primary	Inside tank	-	-	T3, Group IIA	Zone 0 inside tank Classified due to API RP 505 Fig.90
TQ-1358507S	NO. 7 WING CARGO OIL TANK (SB)	HULL	Stabilized Crude Oil	12555.4 m³	Design max: 80 °C;	Design max: 0.24 kgf/cm^2; Design min: -0.07 kgf/cm^2;	Mechanical	Vent, hatches	Primary	Inside tank	-	-	T3, Group IIA	Zone 0 inside tank Classified due to API RP 505 Fig.90
Z-5100501A/B	DIESEL OIL AND FRESH WATER HOSE REELS	MAIN DECK	diesel	100 m3/h	Design max: 100 °C;	Design max: 42.18 kgf/cm^2;	Natural	-	-	-	-	-	-	Diesel to be used is Marine Diesel Fuel (flash point: 60 °C). As per item 4.6.2, ff stored and handled at temperatures lower than 60°C, it does not create any hazardous area. Detailed Design shall confirm/ revise maximum operating temperature.
Z-5133502	REFUELING DISPENSER SKID	MAIN DECK	QAV	225 L/min.	Design max: 60 °C;	Design max: 4.04 kgf/cm^2;	Natural	Flanges, nozzles, valves	Secondary	-	-	3.0 m	T3, Group IIA	API RP 505 - item 14.3.2
Z-5271501 a 557 / 559 / 561 a 588	TANK CLEANNING MACHINE, TANK TOP (FIXED)	HULL	Stabilized Crude Oil	87 m³/h	Design max: 74 °C;	Design max: 10.16 kgf/cm^2;	Natural	Flanges, nozzles, valves	Secondary	-	3.0 m	-	T3, Group IIA	Tank cleaning machines can operate handling sea water, or oily water, or crude oil. Classification considers the worst case
Z-5271558 e 60	TANK CLEANNING MACHINE, TANK BOTTOM (FIXED)	MAIN DECK	Stabilized Crude Oil	25 m³/h	Design max: 74 °C;	Design max: 10.16 kgf/cm^2;	Natural	Flanges, nozzles, valves	Secondary	-	3.0 m	-	T3, Group IIA	Tank cleaning machines can operate handling sea water, or oily water, or crude oil. Classification considers the worst case
TQ-GG-5241501A/B-01	DECK WATER SEAL (MAIN)	MAIN DECK	Water	(See General Note 5.16)	Design max: 90 °C;	Design max: 3.5 kgf/cm^2; Design min: -0.07 kgf/cm^2;	Natural	-	-	-	-	-	-	-
TQ-GG-5241501A/B-02	PRESSURE/VACUUM BREAKER (MAIN)	MAIN DECK	-	9000m³/h	Design max: 90 °C;	Design max: 0.15 kgf/cm^2; Design min: -0.07 kgf/cm^2;	Natural	-	-	-	-	-	-	-
TQ-GG-5241501A/B-03	PRESSURE/VACUUM BREAKER (AUXILIAR)	MAIN DECK	-	9000m³/h	Design max: 90 °C;	Design max: 0.15 kgf/cm^2; Design min: -0.07 kgf/cm^2;	Natural	-	-	-	-	-	-	-

AREA CLASSIFICATION DATA LIST (HULL) TABLE
(I-LI-3010.2G-5400-940-KES-301_0 - ANNEX)

EQUIPMENT			FLAMMABLE MATERIAL	CAPACITY	TEMPERATURE	PRESSURE	VENTILATION	SOURCE OF LEAKAGE		HORIZONTAL DISTANCE (m)			TEMPERATURE CLASS AND GROUP	REMARKS
TAG	DESCRIPTION	LOCATION						DESCRIPTION	GRADE	ZONE 0	ZONE 1	ZONE 2		
TQ-GG-5241501A/B-04	INERT GAS GENERATORS DIESEL DAILY TANK	FORECASTLE	Diesel	20m³	Design max: 60 °C;	Design max: 0.476 kgf/cm^2; Design min: -0.07 kgf/cm^2;	Natural	Vent	Primary	-	-	Vent R =0.5 m	T3, Group IIA	Diesel to be used is Marine Diesel Fuel. However, its vent shall be classified as per API RP 505 - item 8.2.1.3
TQ-GG-5241501A/B-05	DECK WATER SEAL (AUXILIAR)	MAIN DECK	Water	(See General Note 5.16)	Design max: 90 °C;	Design max: 3.5 kgf/cm^2; Design min: -0.07 kgf/cm^2;	Natural	-	-	-	-	-	-	-
Z-B-5335501A/B	SELF PRIMING UNIT FOR BALLAST PUMPS (FWD)	MAIN DECK	-	300L/min	Design max: 60 °C;	Design max: 4.7 kgf/cm^2; Design min: -0.75 kgf/cm^2;	Natural	-	-	-	-	-	-	All electric equipment installed on area adjacent to cargo tank area shall be approved for zone 1, T3, Group IIA.
B-5271501A/B	SLOP PUMP	HULL	Crude Oil	Oper norm flow rate: 500.0 m³/h;	Oper normal: 30 °C; Design max: 90 °C;	Design max: 20.15 kgf/cm^2; Design discharge max: 2182.990011 kPa-g; Design suction max: 344.0817534 kPa-g; Differential pressure: 1585 kPa;	Mechanical	-	-	-	-	-	-	Submerged pumps are not a source for hazardous area.
B-1350501A/U	CARGO PUMP	CARGO TANK	Stabilized Crude Oil	Oper norm flow rate: 1200m³/h;	Design max: 80 °C;	Design discharge max: 1958 kPa-g;	Mechanical	-	-	-	-	-	-	Submerged pumps are not a source for hazardous area.
B-1358501A/B	SLOP OIL SKIMMING PUMP	HULL	Oil Skimming	Oper norm flow rate: 10.0 m³/h;	Design max: 60 °C;	Design discharge max: 321 kPa-g;	Mechanical	-	-	-	-	-	-	Submerged pumps are not a source for hazardous area.
B-5133501A/B	DIESEL OIL SERVICE PUMP	ENGINE ROOM	Diesel	Design max flow rate: 110 m³/h;	Oper normal: 25 °C; Design max: 55 °C;	Design max: 7.2144 kgf/cm^2; Design discharge max: 1742.23 kPa-g; Design suction max: 119.04484 kPa-g; Differential pressure: 456.6 kPa;	Mechanical	-	-	-	-	-	-	Diesel to be used is Marine Diesel Fuel (flash point: 60 °C). As per item 4.6.2, if stored and handled at temperatures lower than 60°C, it does not create any hazardous area.
B-5133502	Well Diesel Transfer Pump	ENGINE ROOM	Diesel	Design max flow rate: 120 m³/h;	Oper normal: 25 °C; Design max: 55 °C;	Design max: 6.95 kgf/cm^2; Design discharge max: 1222.7 kPa-g; Design suction max: 483.73 kPa-g;	Mechanical	-	-	-	-	-	-	Diesel to be used is Marine Diesel Fuel (flash point: 60 °C). As per item 4.6.2, if stored and handled at temperatures lower than 60°C, it does not create any hazardous area.
B-5133504	DIESEL OIL OVERFLOW PUMP (AFT)	ENGINE ROOM	Diesel	Oper norm flow rate: 10 m3/h	Oper normal: 25 °C; Design max: 55 °C;	Design max: 2.53968 kgf/cm^2; Design discharge max: 230.3174444 kPa-g; Design suction max: -2.6731156 kPa-g; Differential pressure: 96.6 kPa;	Mechanical	-	-	-	-	-	-	Diesel to be used is Marine Diesel Fuel (flash point: 60 °C). As per item 4.6.2, if stored and handled at temperatures lower than 60°C, it does not create any hazardous area.
B-5330502A/C	BALLAST (AFT), BILGE AND GENERAL SERVICE PUMP	ENGINE ROOM	Water	Oper norm flow rate: 330.0 m³/h;	Oper normal: 27.2 °C; Design max: 57 °C;	Design max: 15.512 kgf/cm^2; Design discharge max: 1493.7037534 kPa-g; Design suction max: 262.4917534 kPa-g; Differential pressure: 1127.4 kPa;	Mechanical	-	-	-	-	-	-	Fluid not flammable.
B-5330503	SLUDGE PUMP	ENGINE ROOM	Sludge	Oper norm flow rate: 5.0 m³/h;	Oper normal: 30 °C; Design max: 60 °C;	Design max: 3.47604 kgf/cm^2; Design discharge max: 424.1876244 kPa-g; Design suction max: -13.5603756 kPa-g; Differential pressure: 283.6 kPa;	Mechanical	-	-	-	-	-	-	Fluid not flammable.

AREA CLASSIFICATION DATA LIST (HULL) TABLE
(I-LI-3010.2G-5400-940-KES-301_0 - ANNEX)

EQUIPMENT			FLAMMABLE MATERIAL	CAPACITY	TEMPERATURE	PRESSURE	VENTILATION	SOURCE OF LEAKAGE		HORIZONTAL DISTANCE (m)			TEMPERATURE CLASS AND GROUP	REMARKS
TAG	DESCRIPTION	LOCATION						DESCRIPTION	GRADE	ZONE 0	ZONE 1	ZONE 2		
B-5330509A/B	AUXILIARY BILGE PUMP	ENGINE ROOM	oily water	Oper norm flow rate: 10.0 m³/h;	Oper normal: 30 °C; Design max: 60 °C;	Design max: 3.69016 kgf/cm^2; Design discharge max: 294.381307 kPa-g; Design suction max: -7.802693 kPa-g; Differential pressure: 307.6 kPa;	Mechanical	-	-	-	-	-	-	Fluid not flammable.
FT-5133501A/B	DIESEL OIL FILTER	ENGINE ROOM	Diesel	100 m3/h	Design max: 55 °C;	Design max: 5 kgf/cm^2;	Mechanical	-	-	-	-	-	-	Diesel to be used is Marine Diesel Fuel (flash point: 60 °C). As per item 4.6.2, if stored and handled at temperatures lower than 60°C, it does not create any hazardous area.
FT-5133502	DUPLEX DIESEL OIL FILTER FOR SERVICE SYSTEM	ENGINE ROOM	Diesel	110 m3/h	Design max: 55 °C;	Design max: 1666 kPa-g;	Mechanical	-	-	-	-	-	-	Diesel to be used is Marine Diesel Fuel (flash point: 60 °C). As per item 4.6.2, if stored and handled at temperatures lower than 60°C, it does not create any hazardous area.
FT-5133503	DUPLEX DIESEL OIL FILTER FOR SERVICE SYSTEM	ENGINE ROOM	Diesel	120 m3/h	Design max: 55 °C;	Design max: 1235 kPa-g;	Mechanical	-	-	-	-	-	-	Diesel to be used is Marine Diesel Fuel (flash point: 60 °C). As per item 4.6.2, if stored and handled at temperatures lower than 60°C, it does not create any hazardous area.
FT-5330503	SLUDGE PUMP FILTER	ENGINE ROOM	Sludge	5.0 m³/h	Design max: 59 °C;	Design max: 3.75 kgf/cm^2; Design min: -0.61 kgf/cm^2;	Mechanical	-	-	-	-	-	-	Fluid not flammable.
SAO-5330501	OILY WATER SEPARATOR	ENGINE ROOM	Water	5.0 m³/h - 15ppm - 15ppm	Design max: 180 °C;	Design max: 1 kgf/cm^2;	Mechanical	-	-	-	-	-	-	Fluid not flammable.
TQ-5133501P	NO.1 DIESEL OIL STORAGE TANK (PS)	HULL	Diesel	2407.25 m³	Design max: 60 °C;	Design max: 1.136 kgf/cm^2; Design min: -0.07 kgf/cm^2;	Mechanical	-	-	-	-	Vent R =0.5 m	T3, Group IIA	Diesel to be used is Marine Diesel Fuel. However, its vent shall be classified as per API RP 505 - item 8.2.1.3
TQ-5133501S	NO.2 DIESEL OIL STORAGE TANK (SB)	HULL	Diesel	2407.25 m³	Design max: 60 °C;	Design max: 1.136 kgf/cm^2; Design min: -0.07 kgf/cm^2;	Mechanical	-	-	-	-	Vent R =0.5 m	T3, Group IIA	Diesel to be used is Marine Diesel Fuel. However, its vent shall be classified as per API RP 505 - item 8.2.1.3
TQ-5133502P	NO.1 DIESEL OIL SERVICE TANK (PS)	HULL	Diesel	1557.63 m³	Design max: 60 °C;	Design max: 1.136 kgf/cm^2; Design min: -0.07 kgf/cm^2;	Mechanical	-	-	-	-	Vent R =0.5 m	T3, Group IIA	Diesel to be used is Marine Diesel Fuel. However, its vent shall be classified as per API RP 505 - item 8.2.1.3
TQ-5133502S	NO.2 DIESEL OIL SERVICE TANK (SB)	HULL	Diesel	1557.63 m³	Design max: 60 °C;	Design max: 1.136 kgf/cm^2; Design min: -0.07 kgf/cm^2;	Mechanical	-	-	-	-	Vent R =0.5 m	T3, Group IIA	Diesel to be used is Marine Diesel Fuel. However, its vent shall be classified as per API RP 505 - item 8.2.1.3
TQ-5133504	AFT DIESEL OIL OVERFLOW TANK	ENGINE ROOM	Diesel	124.66 m³	Design max: 55 °C;	Design max: 2.216 kgf/cm^2; Design min: -0.07 kgf/cm^2;	Mechanical	-	-	-	-	Vent R =0.5 m	T3, Group IIA	Diesel to be used is Marine Diesel Fuel. However, its vent shall be classified as per API RP 505 - item 8.2.1.3
TQ-5330501	BILGE WATER SETTLING TANK	ENGINE ROOM	Water	126.044 m³	Design max: 60 °C;	Design max: 2.216 kgf/cm^2; Design min: -0.07 kgf/cm^2;	Mechanical	-	-	-	-	-	-	Fluid not flammable.
TQ-5330502	SLUDGE TANK	ENGINE ROOM	Sludge	37.398 m³	Design max: 60 °C;	Design max: 2.756 kgf/cm^2; Design min: -0.07 kgf/cm^2;	Mechanical	-	-	-	-	-	-	Fluid not flammable.
TQ-5330504P	NO. 1 MAIN DECK DRAINAGE BOX (PS)	HULL	Crude Oil	12m³	Design max: 80 °C;	Design max: 3.5 kgf/cm^2;	Natural	-	-	-	(see general note 5.15)	-	T3, Group IIA	
TQ-5330504P	NO. 1 MAIN DECK DRAINAGE BOX (SB)	HULL	Crude Oil	12m³	Design max: 80 °C;	Design max: 3.5 kgf/cm^2;	Natural	-	-	-	(see general note 5.15)	-	T3, Group IIA	
TQ-5330505P	NO. 2 MAIN DECK DRAINAGE BOX (PS)	HULL	Crude Oil	12m³	Design max: 80 °C;	Design max: 3.5 kgf/cm^2;	Natural	-	-	-	(see general note 5.15)	-	T3, Group IIA	
TQ-5330505S	NO. 2 MAIN DECK DRAINAGE BOX (SB)	HULL	Crude Oil	12m³	Design max: 80 °C;	Design max: 3.5 kgf/cm^2;	Natural	-	-	-	(see general note 5.15)	-	T3, Group IIA	
TQ-5330506S	NO. 3 MAIN DECK DRAINAGE BOX (SB)	HULL	Crude Oil	12m³	Design max: 80 °C;	Design max: 3.5 kgf/cm^2;	Natural	-	-	-	(see general note 5.15)	-	T3, Group IIA	
B-5115501A/B	FRESH WATER HYDROPHORE PUMP	ENGINE ROOM	Water	Oper norm flow rate: 80 m³/h;	Design max: 70 °C;	Design max: 1226 kPag	Mechanical	-	-	-	-	-	-	Fluid not flammable.

AREA CLASSIFICATION DATA LIST (HULL) TABLE
(I-LI-3010.2G-5400-940-KES-301_0 - ANNEX)

EQUIPMENT			FLAMMABLE MATERIAL	CAPACITY	TEMPERATURE	PRESSURE	VENTILATION	SOURCE OF LEAKAGE		HORIZONTAL DISTANCE (m)			TEMPERATURE CLASS AND GROUP	REMARKS
TAG	DESCRIPTION	LOCATION						DESCRIPTION	GRADE	ZONE 0	ZONE 1	ZONE 2		
B-5115502A/B	ACCOMMODATION HOT FRESH WATER CIRCULATION PUMP	ENGINE ROOM	Water	Oper norm flow rate: 6.3 m³/h;	Design max: 90 °C;	Design max: 1226 kPa-g;	Mechanical	-	-	-	-	-	-	Fluid not flammable.
B-5115503A/B	DISTILLED WATER PUMP	ENGINE ROOM	Water	Design max flow rate: 70 m³/h;	Design max: 60 °C;	Differential pressure: 637 kPa;	Mechanical	-	-	-	-	-	-	Fluid not flammable.
FT-UA-5134501A/C-01A/B	AIR DRYING UNIT PRE-FILTER	M-15B	Air	Design max flow rate: 2600 m³/h;	(See General Note 5.16)	(See General Note 5.16)	Natural	-	-	-	-	-	-	Fluid not flammable.
FT-UA-5134501A/C-02A/B	AIR DRYING UNIT AFTER-FILTER	M-15B	Air	Design max flow rate: 2600 m³/h;	(See General Note 5.16)	(See General Note 5.16)	Natural	-	-	-	-	-	-	Fluid not flammable.
P-UC-5134501A/E-01	INST./SERV. AIR COMP UNIT INTERCOOLER	M-15B	Air	(See General Note 5.16)	(See General Note 5.16)	(See General Note 5.16)	Natural	-	-	-	-	-	-	Fluid not flammable.
P-UC-5134501A/E-02	INST. / SERV. AIR COMPRES. UNIT AFTER COOLER	M-15B	Air	(See General Note 5.16)	(See General Note 5.16)	(See General Note 5.16)	Natural	-	-	-	-	-	-	Fluid not flammable.
S-UA-5134501A/C-01A/B	AIR DRYER	HULL	-	(See General Note 5.16)	Design max: 60 °C;	(See General Note 5.16)	Natural	-	-	-	-	-	-	Fluid not flammable.
GE-UG-5261501	EMERGENCY GENERATOR	POOP DECK	Diesel	2500kVA	(See General Note 5.16)	(See General Note 5.16)	Mechanical	-	-	-	-	-	-	Diesel to be used is Marine Diesel Fuel.
GE-UG-5262501	AUXILIARY GENERATOR	POOP DECK	Diesel	2500kVA	(See General Note 5.16)	(See General Note 5.16)	Mechanical	-	-	-	-	-	-	Diesel to be used is Marine Diesel Fuel (flash point: 60 °C). As per item 4.6.2, if stored and handled at temperatures lower than 60°C, it does not create any hazardous area.
C-UC-UG-5261501	EMERGENCY GENERATOR START UP AIR COMPRESSOR	POOP DECK	Air	(See General Note 5.16)	Design max: 80 °C;	Design max: 44.87 kgf/cm^2;	Mechanical	-	-	-	-	-	-	Fluid not flammable.
UM-5122501A/B	POTABLE WATER MAKER	HULL	Water	(See General Note 5.16)	Design max: 60 °C;	(See General Note 5.16)	Natural	-	-	-	-	-	-	Fluid not flammable.
V-5115501	FRESH WATER HYDROPHORE VESSEL	ENGINE ROOM	Water	22 m³	Design max: 70 °C;	Design max: 1226 kPa-g;	Mechanical	-	-	-	-	-	-	Fluid not flammable.
GE-UG-5262502A/B	HULL GENERATOR	M-15B	Gas	7 MW	(See General Note 5.16)	(See General Note 5.16)	Mechanical	Flanges, nozzles, valves, vent	Secondary	-	-	inside hood; and its exhaust ventilation outlets up to 3m.	T3, Group IIA	See General Note 5.8
BT-UG-5262502A/B	HULL GENERATOR CONTROL BATTERY	M-15B	Hydrogen	(See General Note 5.16)	(See General Note 5.16)	(See General Note 5.16)	Natural	-	-	-	-	-	-	See General Note 5.4
V-5134501A/C	INSTRUMENT / SERVICE AIR RECEIVER	M-15B	Air	(See General Note 5.16)	Design max: 70 °C;	Design max: 1226 kPa-g; Design min: 1226 kPa-g;	Natural	-	-	-	-	-	-	Fluid not flammable.
Z-1359501	OFFLOADING TRANSFER METERING SKID	M-16B	Crude Oil	7200.0 m³/h	(See General Note 5.16)	(See General Note 5.16)	Natural	Flanges, nozzles, valves	Secondary	-	-	R = 3,0 m	T3, Group IIA	API RP 505 - item 14.3.2
V-UG-5261501	EMERGENCY GENERATOR START-UP AIR RECEIVER	POOP DECK	Air	0.5 m³	Design max: 65 °C;	Design max: 46.59 kgf/cm^2;	Mechanical	-	-	-	-	-	-	Fluid not flammable.
V-5138501	AUXILIARY GENERATOR START-UP AIR RECEIVER	ENGINE ROOM	Air	0.5 m³	(See General Note 5.16)	(See General Note 5.16)	Mechanical	-	-	-	-	-	-	Fluid not flammable.
Z-5122501A/B	ULTRAVIOLET STERILIZER UNIT	HULL	Water	(See General Note 5.16)	Design max: 60 °C;	(See General Note 5.16)	Natural	-	-	-	-	-	-	Fluid not flammable.
Z-6440501A/B	HOSE REELS	HULL	Stabilized Crude Oil	(See General Note 5.16)	(See General Note 5.16)	(See General Note 5.16)	Natural	Flanges, nozzles, valves	Secondary	-	-	R = 3,0 m	T3, Group IIA	API RP 505 - item 8.2.5
B-5331501A/D	PRODUCED WATER TANK BOOSTER PUMP	HULL	Water	Design max flow rate: 500 m³/h;	Design max: 80 °C;	Design max: 2794.7 kPa-g;	Mechanical	-	-	-	-	-	-	Submerged pumps located in produced water tanks that are classified as Zone-1.
B-5331502A/D	PRODUCED WATER TRANSFER PUMP	HULL	Water	Design max flow rate: 100 m³/h;	Design max: 80 °C;	Design max: 2010.7 kPa-g;	Mechanical	-	-	-	-	-	-	Submerged pumps located in produced water tanks that are classified as Zone-1.
B-5336502A/D	OIL SKIMMING PUMP	HULL	Crude Oil	Design max flow rate: 50 m³/h;	Design max: 80 °C;	Design max: 1430.7 kPa-g;	Mechanical	-	-	-	-	-	-	Submerged pumps located in produced water tanks are classified as Zone-1.
BT-5263501A/B	EMERGENCY LIGHTING BATTERY 220VDC	ACCOMMODATION	Hydrogen	685 Ah	(See General Note 5.16)	(See General Note 5.16)	Mechanical	Vent	Primary	-	Whole compartment	-	T1, Group IIC	See General Note 5.4
BT-UB-5420501A/C-01A/B	FIRE WATER PUMP 24VDC STARTING BATTERY	LIFEBOAT PLATFORM	Hydrogen	(See General Note 5.16)	(See General Note 5.16)	(See General Note 5.16)	Natural	-	-	-	-	-	-	See General Note 5.4

AREA CLASSIFICATION DATA LIST (HULL) TABLE
(I-LI-3010.2G-5400-940-KES-301_0 - ANNEX)

EQUIPMENT			FLAMMABLE MATERIAL	CAPACITY	TEMPERATURE	PRESSURE	VENTILATION	SOURCE OF LEAKAGE		HORIZONTAL DISTANCE (m)			TEMPERATURE CLASS AND GROUP	REMARKS
TAG	DESCRIPTION	LOCATION						DESCRIPTION	GRADE	ZONE 0	ZONE 1	ZONE 2		
BT-UB-5420501A/C-02	FIRE WATER PUMP 24VDC CONTROL BATTERY	LIFEBOAT PLATFORM	Hydrogen	(See General Note 5.16)	(See General Note 5.16)	(See General Note 5.16)	Natural	-	-	-	-	-	-	See General Note 5.4
BT-UG-5262501-01	AUXILIARY GENERATOR CONTROL BATTERY	POOP DECK	Hydrogen	150 Ah	(See General Note 5.16)	(See General Note 5.16)	Mechanical	-	-	-	-	-	-	See General Note 5.4
AQ-V-5125501A/B	CALORIFIER ELECTRIC HEATER	ENGINE ROOM	Water	(See General Note 5.16)	Design max: 90 °C;	Design max: 1226 kPag;	Mechanical	-	-	-	-	-	-	Fluid not flammable.
B-5111501A/C	ENGINE ROOM COOLING SEA WATER PUMP	ENGINE ROOM	Water	Oper norm flow rate: 650m³/h;	Oper normal: 27.2 °C; Design max: 57.2 °C;	Design max: 800 kPa-g; Design discharge max: 501.1 kPa-g; Design suction max: 195.56 kPa-g; Differential pressure: 485.87 kPa-g;	Mechanical	-	-	-	-	-	-	Fluid not flammable.
B-5120503A/D	ENGINE ROOM CENTRAL FRESH WATER COOLING CIRCULATING PUMP	ENGINE ROOM	Water	Oper norm flow rate: 650.0 m³/h;	Design max: 71.3 °C;	Design max: 1085 kPa-g;	Mechanical	-	-	-	-	-	-	Fluid not flammable.
B-5133503	REFUELING DRAIN PUMP	MAIN DECK	QAV	Oper norm flow rate: 13.5 m³/h;	Oper normal: 25 °C; Design max: 60 °C;	Design max: 188.1 kPa-g;	Natural	Flanges, seals	Secondary	-	-	3.0 m	T3, Group IIA	API RP 505 - item 10.9.1
B-5133506	DIESEL OIL OVERFLOW PUMP (FWD)	FORECASTLE	Diesel	Oper norm flow rate: 5m³/h;	Oper normal: 25 °C;	Design max: 294 kPa-g;	Mechanical	-	-	-	-	-	-	Diesel to be used is Marine Diesel Fuel (flash point: 60 °C). As per item 4.6.2, ff stored and handled at temperatures lower than 60°C, it does not create any hazardous area.
B-5139502A/B	PORTABLE CARGO PUMPS	HULL	Stabilized Crude Oil	Oper norm flow rate: 300.0 m³/h;	Oper max: 50 °C; Design max: 80 °C;	Design discharge max: 882 kPa-g;	Natural	Flanges, seals	Secondary	-	-	3,0 m	T3, Group IIA	API RP 505 - item 10.9.1
B-5241501A/B	INERT GAS SEAL PUMP	ENGINE ROOM	Water	Oper norm flow rate: 12 m³/h;	Oper normal: 27.2 °C; Design max: 60.00 °C;	Design max: 742 kPa-g; Design discharge max: 492 kPa-g;	Mechanical	-	-	-	-	-	-	Fluid not flammable.
B-5241502A/B	INERT GAS GENERATOR SEA WATER PUMP	ENGINE ROOM	Water	Oper norm flow rate: 540 m³/h;	Oper normal: 27.2 °C; Design max: 60.00 °C;	Design max: 9.3232 kgf/cm^2; Design discharge max: 834.31658964 kPa-g; Design suction max: 117.92906964 kPa-g; Differential pressure: 603.2 kPa;	Mechanical	-	-	-	-	-	-	Fluid not flammable.
B-5271502A/B	BUTTERWORTH PUMP	HULL	Water	Oper norm flow rate: 420m³/h;	Oper normal: 27.2 °C; Oper max: 57.00 °C; Design max: 57.00 °C;	Design max: 19.4 kgf/cm^2; Design discharge max: 1963.92782964 kPa-g; Design suction max: 252.72986964 kPa-g; Differential pressure: 178.85 mH2O;	Natural	-	-	-	-	-	-	Fluid not flammable.
B-5320501A/D	UPPER RISER BALCONY DRAINAGE PUMP	UPPER RISER BALCONY	Crude Oil	Oper norm flow rate: 5 m³/h;	Oper normal: 30 °C; Design max: 55 °C;	Design max: 2.4 kgf/cm^2; Design discharge max: 127.139693 kPa-g; Design suction max: -8.065435 kPa-g; Differential pressure: 79.8 kPa;	Natural	Flanges, seals	Secondary	-	-	3.0 m	T3, Group IIA	API RP 505 - item 10.9.1

AREA CLASSIFICATION DATA LIST (HULL) TABLE
(I-LI-3010.2G-5400-940-KES-301_0 - ANNEX)

EQUIPMENT			FLAMMABLE MATERIAL	CAPACITY	TEMPERATURE	PRESSURE	VENTILATION	SOURCE OF LEAKAGE		HORIZONTAL DISTANCE (m)			TEMPERATURE CLASS AND GROUP	REMARKS
TAG	DESCRIPTION	LOCATION						DESCRIPTION	GRADE	ZONE 0	ZONE 1	ZONE 2		
B-5330505	FWD OFFLOADING STATION DRAINAGE PNEUMATIC PUMP	ACCOMMODATION	Stabilized Crude Oil	Oper norm flow rate: 5 m³/h;	Oper normal: 30 °C; Design max: 56 °C;	Design max: 0.312 kgf/cm^2; Design min: -0.5 kgf/cm^2; Design discharge max: 732.1247854 kPa-g; Design suction max: -7.09071859999999 kPa-g; Differential pressure: 30 kPa;	Natural	Flanges, seals	Secondary	-	-	3.0 m	T3, Group IIA	API RP 505 - item 10.9.1
B-5330506	AFT OFFLOADING STATION DRAINAGE PNEUMATIC PUMP	POOP DECK	Stabilized Crude Oil	Oper norm flow rate: 5 m³/h;	Oper normal: 30 °C; Design max: 60 °C;	Design max: 0.312 kgf/cm^2; Design min: -0.5 kgf/cm^2; Design discharge max: 774.6043774 kPa-g; Design suction max: -7.0907186 kPa-g; Differential pressure: 40 kPa;	Natural	Flanges, seals	Secondary	-	-	3.0 m	T3, Group IIA	API RP 505 - item 10.9.1
B-5330507A/B	PORTABLE PNEUMATIC PUMPS FOR HULL DRAINAGE	MAIN DECK	Crude Oil	Oper norm flow rate: 10 m³/h;	Oper normal: 30 °C;	Design discharge max: 440.848342 kPa-g; Design suction max: 9.345118 kPa-g; Differential pressure: 315 kPa;	Natural	Flanges, seals	Secondary	-	-	3.0 m	T3, Group IIA	API RP 505 - item 10.9.1
B-5330508A/G	MAIN DECK DRAINAGE BOXES PUMPS	MAIN DECK	Crude Oil	Oper norm flow rate: 30 m³/h;	Oper normal: 30 °C; Design max: 56 °C;	Design max: 2.4 kgf/cm^2; Design discharge max: 116.808876 kPa-g; Design suction max: -11.217924 kPa-g; Differential pressure: 69.3 kPa;	Natural	Flanges, seals	Secondary	-	-	3.0 m	T3, Group IIA	API RP 505 - item 10.9.1
B-5330510A/B	COFFERDAM PNEUMATIC DRAINAGE PUMPS	HULL	Water	Oper norm flow rate: 15.0 m³/h;	Oper normal: 30 °C; Design max: 55 °C;	Design max: 705.5 kPa-g; Design min: -0.47 kgf/cm^2; Design discharge max: 446.8883477 kPa-g; Design suction max: -1.9126603 kPa-g;	Mechanical	-	-	-	-	-	-	Pumps are inside cofferdam, classified as Zone-1.
B-5330512A/B	FORE CASTLE PNEUMATIC DRAINAGE PUMPS	FORECASTLE	Water	Oper norm flow rate: 10 m³/h;	Oper normal: 30 °C; Oper max: 55.00 °C; Design max: 55 °C;	Design max: 1.56 kgf/cm^2; Design min: -0.43 kgf/cm^2; Design discharge max: 737.798537 kPa-g; Design suction max: -6.947551 kPa-g;	Mechanical	-	-	-	-	-	-	Fluid not flammable.
B-5335501A/B	BALLAST PUMP (FWD)	HULL	Water	Oper norm flow rate: 800m³/h;	Oper normal: 27.2 °C;	Design min: -0.75 kgf/cm^2; Design discharge max: 703.7951534 kPa-g; Design suction max: 282.5867534 kPa-g; Differential pressure: 400 kPa;	Mechanical	-	-	-	-	-	-	Fluid not flammable.

AREA CLASSIFICATION DATA LIST (HULL) TABLE
(I-LI-3010.2G-5400-940-KES-301_0 - ANNEX)

EQUIPMENT			FLAMMABLE MATERIAL	CAPACITY	TEMPERATURE	PRESSURE	VENTILATION	SOURCE OF LEAKAGE		HORIZONTAL DISTANCE (m)			TEMPERATURE CLASS AND GROUP	REMARKS
TAG	DESCRIPTION	LOCATION						DESCRIPTION	GRADE	ZONE 0	ZONE 1	ZONE 2		
B-5336503A/B	SLOP DISCHARGE PUMP	HULL	Water / oily water	Oper norm flow rate: 350.0 m³/h;	Oper normal: 30 °C; Oper max: 90 °C; Design max: 90 °C; Design tube max: 90 °C;	Design max: 20.15 kgf/cm^2; Design tube max: 20.15 kgf/cm^2; Design discharge max: 2197.2445658 kPa-g; Design suction max: 319.6476914 kPa-g; Differential pressure: 1552.8 kPa;	Mechanical	-	-	-	-	-	-	Pumps located inside slop tanks. Submerged pumps are not a source for hazardous area.
B-GG-5241501A/B	DIESEL OIL PUMP UNIT FOR INERT GAS	FORECASTLE	Diesel	Oper norm flow rate: 1.8 m³/h;	Oper normal: 20 °C;	Design max: 2950 kPa-g; Design discharge max: 2600 kPa-g;	Mechanical	-	-	-	-	-	-	Diesel to be used is Marine Diesel Fuel (flash point: 60 °C). As per item 4.6.2, ff stored and handled at temperatures lower than 60°C, it does not create any hazardous area.
B-UH-5139501-A/X	LOCAL HYDRAULIC ACTUATION PUMP	MAIN DECK	HYDRAULIC FLUID	Oper norm flow rate: 6.0 cm³/s;	(See General Note 5.16)	Design max: 121 kgf/cm^2;	Natural	-	-	-	-	-	-	Fluid not flammable.
C-UC-5138501	START-UP AIR COMPRESSOR	ENGINE ROOM	Air	(See General Note 5.16)	Design max: 72 °C;	Design max: 34.67 kgf/cm^2;	Mechanical	-	-	-	-	-	-	Fluid not flammable.
FT-5111501A/B	ENGINE ROOM COOLING SEA WATER PUMP FILTER	ENGINE ROOM	Water	2400 m³/h	Design max: 57.2 °C;	Design max: 800 kPa-g;	Mechanical	-	-	-	-	-	-	Fluid not flammable.
FT-5115501	FRESH WATER FILTER	MAIN DECK	Water	100 m³/h	Design max: 40 °C;	Design max: 880 kPa-g;	Natural	-	-	-	-	-	-	Fluid not flammable.
FT-5120501	ENGINE ROOM CENTRAL FRESH WATER COOLING FILTER	ENGINE ROOM	Water	195.0 m³/h	Design max: 68 °C;	Design max: 13.03 kgf/cm^2;	Mechanical	-	-	-	-	-	-	Fluid not flammable.
FT-UM-5121501A/B	POTABLE WATER MAKER FILTER	HULL	Water	3.5 m³/h	(See General Note 5.16)	(See General Note 5.16)	Natural	-	-	-	-	-	-	Fluid not flammable.
GG-5241501A/B	INERT GAS GENERATOR	FORECASTLE	Gas	9000.0 Nm³/h	Design max: 60 °C;	Design max: 120 kPa-g;	Natural	Vent	Primary	-	R = 1,5 m around vent	R = 3,0 m around vent	T3, Group IIA	API RP 505 - item 8.2.3.3.1
GN-Z-1359502-02	AFT OFFLOADING HAWSER WINCH & REEL	HULL	Stabilized Crude Oil	(See General Note 5.16)	(See General Note 5.16)	(See General Note 5.16)	Natural	Flanges, nozzles, valves	Secondary	-	1.5 m	3.0 m	T3, Group IIA	Around the Cargo Oil Hose Reel Zone 2 - Inside Coaming and 3 m surrounding the outer edge of the coaming up to a height of 2.4 m;
P-5120501A/B	ENGINE ROOM CENTRAL FRESH WATER COOLER	ENGINE ROOM	Water	1950.0 m³/h	Design max: 68 °C;	Design max: 13.03 kgf/cm^2;	Mechanical	-	-	-	-	-	-	Fluid not flammable.
P-UC-5138501-A/B	START-UP AIR COMPRESSOR RADIATOR	ENGINE ROOM	Air	(See General Note 5.16)	Design max: 120 °C;	Design max: 1 kgf/cm^2; Design min: 9999 kgf/cm^2;	Mechanical	-	-	-	-	-	-	Fluid not flammable.
SC-5133501B	DIESEL OIL PURIFIER	ENGINE ROOM	Diesel	22.0 m³/h	Design max: 85 °C;	Design max: 4.04 kgf/cm^2;	Mechanical	-	-	-	-	-	-	Diesel to be used is Marine Diesel Fuel (flash point: 60 °C). As per item 4.6.2, ff stored and handled at temperatures lower than 60°C, it does not create any hazardous area. Detailed Design shall confirm/ revise maximum operating temperature.
TQ-1358508	COFFERDAM	HULL	Air	5892.5 m³	Design max: 80 °C;	Design max: 0.076 kgf/cm^2; Design min: -0.07 kgf/cm^2;	Mechanical	Vent, hatches	-	-	INSIDE TANK	-	-	Zone 1 inside tank Classified due to API RP 505 Fig.90
TQ-1358510C	AFT VOID	ENGINE ROOM	Air	3090.1 m³	Design max: 60 °C;	Design max: 0.075 kgf/cm^2; Design min: -0.07 kgf/cm^2;	Mechanical	-	-	-	-	-	-	Fluid not flammable.
TQ-5115501P	NO.1 DISTILLED WATER STORAGE TANK (PS)	ENGINE ROOM	Water	523.9 m³	Design max: 60 °C;	Design max: 0.076 kgf/cm^2; Design min: -0.07 kgf/cm^2;	Mechanical	-	-	-	-	-	-	Fluid not flammable.

AREA CLASSIFICATION DATA LIST (HULL) TABLE
(I-LI-3010.2G-5400-940-KES-301_0 - ANNEX)

EQUIPMENT			FLAMMABLE MATERIAL	CAPACITY	TEMPERATURE	PRESSURE	VENTILATION	SOURCE OF LEAKAGE		HORIZONTAL DISTANCE (m)			TEMPERATURE CLASS AND GROUP	REMARKS
TAG	DESCRIPTION	LOCATION						DESCRIPTION	GRADE	ZONE 0	ZONE 1	ZONE 2		
TQ-5115501S	NO.2 DISTILLED WATER STORAGE TANK (SB)	ENGINE ROOM	Water	523.9 m³	Design max: 60 °C;	Design max: 0.076 kgf/cm^2; Design min: -0.07 kgf/cm^2;	Mechanical	-	-	-	-	-	-	Fluid not flammable.
TQ-5115502P	NO.1 FRESH WATER STORAGE TANK (PS)	ENGINE ROOM	Water	1620 m³	Design max: 60 °C;	Design max: 0.076 kgf/cm^2; Design min: -0.07 kgf/cm^2;	Mechanical	-	-	-	-	-	-	Fluid not flammable.
TQ-5115502S	NO.2 FRESH WATER STORAGE TANK (SB)	ENGINE ROOM	Water	1620 m³	Design max: 60 °C;	Design max: 0.076 kgf/cm^2; Design min: -0.07 kgf/cm^2;	Mechanical	-	-	-	-	-	-	Fluid not flammable.
TQ-5120501	EXPANSION TANK FOR ENGINE ROOM CENTRAL FRESH WATER COOLING SYSTEM	ACCOMMODATION	Water	0.8 m³	Design max: 68 °C;	Design max: 0.076 kgf/cm^2; Design min: -0.07 kgf/cm^2;	Mechanical	-	-	-	-	-	-	Fluid not flammable.
TQ-5120502	ENGINE ROOM FRESH WATER COOLING CHEMICAL INJECTION TANK	ENGINE ROOM	Water	50 L	Design max: 68 °C;	Design max: 2.756 kgf/cm^2; Design min: -0.07 kgf/cm^2;	Mechanical	-	-	-	-	-	-	Fluid not flammable.
TQ-5133503	FWD DIESEL OIL OVERFLOW TANK	FORECASTLE	Diesel	9.0 m³	Design max: 60 °C;	Design max: 0.676 kgf/cm^2; Design min: -0.07 kgf/cm^2;	Natural	Vent	Primary	-	INSIDE TANK	Vent R =0.5 m	T3, Group IIA	Diesel to be used is Marine Diesel Fuel. However, its vent shall be classified as per API RP 505 - item 8.2.1.3 Zone 1 inside tank. Classified due to API RP 505 Fig.90
TQ-5139501	HYDRAULIC STORAGE TANK FOR SUBMERGED PUMPS	ENGINE ROOM	HYDRAULIC FLUID	19.39 m³	Design max: 90 °C;	Design max: 0.596 kgf/cm^2; Design min: -0.07 kgf/cm^2;	Mechanical	-	-	-	-	-	-	Fluid not flammable.
TQ-5139502	HYDRAULIC DRAIN TANK FOR SUBMERGED PUMP	ENGINE ROOM	HYDRAULIC FLUID	20.4 m³	Design max: 60 °C;	Design max: 0.596 kgf/cm^2; Design min: -0.07 kgf/cm^2;	Mechanical	-	-	-	-	-	-	Fluid not flammable.
TQ-5320501P	NO. 1 UPPER RISER BALCONY DRAINAGE BOX (PS)	UPPER RISER BALCONY	Crude Oil	9 m³	Design max: 80 °C;	Design max: 3.5 kgf/cm^2;	Natural		Primary	-	-	3.0 m	T3, Group IIA	
TQ-5320502P	NO. 2 UPPER RISER BALCONY DRAINAGE BOX (PS)	UPPER RISER BALCONY	Crude Oil	9 m³	Design max: 80 °C;	Design max: 3.5 kgf/cm^2;	Natural		Primary	-	-	3.0 m	T3, Group IIA	
TQ-5331501P	PRODUCED WATER TANK	HULL	Water	10864.0 m³	Design max: 80 °C;	Design max: 0.24 kgf/cm^2; Design min: -0.07 kgf/cm^2;	Mechanical	-	-	-	INSIDE TANK	-	-	Zone 1 inside tank Classified due to API RP 505 Fig.90
TQ-5331501S	PRODUCED WATER TANK (SB)	HULL	Water	28917.0 m³	Design max: 80 °C;	Design max: 0.24 kgf/cm^2; Design min: -0.07 kgf/cm^2;	Mechanical	-	-	-	INSIDE TANK	-	-	Zone 1 inside tank Classified due to API RP 505 Fig.90
TQ-5335501P	NO. 1 WATER BALLAST TANK (PS)	HULL	Water	6014.6 m³	Design max: 80 °C;	Design max: 0.076 kgf/cm^2; Design min: -0.07 kgf/cm^2;	Mechanical	-	-	-	INSIDE TANK	-	-	Zone 1 inside tank Classified due to API RP 505 Fig.90
TQ-5335501S	NO. 1 WATER BALLAST TANK (SB)	HULL	Water	6014.6 m³	Design max: 80 °C;	Design max: 0.076 kgf/cm^2; Design min: -0.07 kgf/cm^2;	Mechanical	-	-	-	INSIDE TANK	-	-	Zone 1 inside tank Classified due to API RP 505 Fig.90
TQ-5335502P	NO. 2 WATER BALLAST TANK (PS)	HULL	Water	6014.6 m³	Design max: 80 °C;	Design max: 0.076 kgf/cm^2; Design min: -0.07 kgf/cm^2;	Mechanical	-	-	-	INSIDE TANK	-	-	Zone 1 inside tank Classified due to API RP 505 Fig.90
TQ-5335502S	NO. 2 WATER BALLAST TANK (SB)	HULL	Water	6014.6 m³	Design max: 80 °C;	Design max: 0.076 kgf/cm^2; Design min: -0.07 kgf/cm^2;	Mechanical	-	-	-	INSIDE TANK	-	-	Zone 1 inside tank Classified due to API RP 505 Fig.90
TQ-5335503P	NO. 3 WATER BALLAST TANK (PS)	HULL	Water	6873.8 m³	Design max: 80 °C;	Design max: 0.076 kgf/cm^2; Design min: -0.07 kgf/cm^2;	Mechanical	-	-	-	INSIDE TANK	-	-	Zone 1 inside tank Classified due to API RP 505 Fig.90

AREA CLASSIFICATION DATA LIST (HULL) TABLE
(I-LI-3010.2G-5400-940-KES-301_0 - ANNEX)

EQUIPMENT			FLAMMABLE MATERIAL	CAPACITY	TEMPERATURE	PRESSURE	VENTILATION	SOURCE OF LEAKAGE		HORIZONTAL DISTANCE (m)			TEMPERATURE CLASS AND GROUP	REMARKS
TAG	DESCRIPTION	LOCATION						DESCRIPTION	GRADE	ZONE 0	ZONE 1	ZONE 2		
TQ-5335503S	NO. 3 WATER BALLAST TANK (SB)	HULL	Water	6873.8 m³	Design max: 80 °C;	Design max: 0.076 kgf/cm^2; Design min: -0.07 kgf/cm^2;	Mechanical	-	-	-	INSIDE TANK	-	-	Zone 1 inside tank Classified due to API RP 505 Fig.90
TQ-5335504P	NO. 4 WATER BALLAST TANK (PS)	HULL	Water	6873.8 m³	Design max: 80 °C;	Design max: 0.076 kgf/cm^2; Design min: -0.07 kgf/cm^2;	Mechanical	-	-	-	INSIDE TANK	-	-	Zone 1 inside tank Classified due to API RP 505 Fig.90
TQ-5335504S	NO. 4 WATER BALLAST TANK (SB)	HULL	Water	6873.8 m³	Design max: 80 °C;	Design max: 0.076 kgf/cm^2; Design min: -0.07 kgf/cm^2;	Mechanical	-	-	-	INSIDE TANK	-	-	Zone 1 inside tank Classified due to API RP 505 Fig.90
TQ-5335505P	NO. 5 WATER BALLAST TANK (PS)	HULL	Water	6873.8 m³	Design max: 80 °C;	Design max: 0.076 kgf/cm^2; Design min: -0.07 kgf/cm^2;	Mechanical	-	-	-	INSIDE TANK	-	-	Zone 1 inside tank Classified due to API RP 505 Fig.90
TQ-5335505S	NO. 5 WATER BALLAST TANK (SB)	HULL	Water	6873.8 m³	Design max: 80 °C;	Design max: 0.076 kgf/cm^2; Design min: -0.07 kgf/cm^2;	Mechanical	-	-	-	INSIDE TANK	-	-	Zone 1 inside tank Classified due to API RP 505 Fig.90
TQ-5335506P	NO. 6 WATER BALLAST TANK (PS)	HULL	Water	6014.6 m³	Design max: 80 °C;	Design max: 0.076 kgf/cm^2; Design min: -0.07 kgf/cm^2;	Mechanical	-	-	-	INSIDE TANK	-	-	Zone 1 inside tank Classified due to API RP 505 Fig.90
TQ-5335506S	NO. 6 WATER BALLAST TANK (SB)	HULL	Water	6014.6 m³	Design max: 80 °C;	Design max: 0.076 kgf/cm^2; Design min: -0.07 kgf/cm^2;	Mechanical	-	-	-	INSIDE TANK	-	-	Zone 1 inside tank Classified due to API RP 505 Fig.90
TQ-5335507P	NO. 7 WATER BALLAST TANK (PS)	HULL	Water	3866.5 m³	Design max: 80 °C;	Design max: 0.076 kgf/cm^2; Design min: -0.07 kgf/cm^2;	Mechanical	-	-	-	INSIDE TANK	-	-	Zone 1 inside tank Classified due to API RP 505 Fig.90
TQ-5335507S	NO. 7 WATER BALLAST TANK (SB)	HULL	Water	3866.5 m³	Design max: 80 °C;	Design max: 0.076 kgf/cm^2; Design min: -0.07 kgf/cm^2;	Mechanical	-	-	-	INSIDE TANK	-	-	Zone 1 inside tank Classified due to API RP 505 Fig.90
TQ-5335508P	NO. 8 WATER BALLAST TANK (PS)	HULL	Water	3150.5 m³	Design max: 80 °C;	Design max: 0.076 kgf/cm^2; Design min: -0.07 kgf/cm^2;	Mechanical	-	-	-	INSIDE TANK	-	-	Zone 1 inside tank Classified due to API RP 505 Fig.90
TQ-5335508S	NO. 8 WATER BALLAST TANK (SB)	HULL	Water	3150.5 m³	Design max: 80 °C;	Design max: 0.076 kgf/cm^2; Design min: -0.07 kgf/cm^2;	Mechanical	-	-	-	INSIDE TANK	-	-	Zone 1 inside tank Classified due to API RP 505 Fig.90
TQ-5335509P	N0. 9 WATER BALLAST TANK (PS)	HULL	Water	3991.48 m³	Design max: 80 °C;	Design max: 0.076 kgf/cm^2; Design min: -0.07 kgf/cm^2;	Mechanical	-	-	-	INSIDE TANK	-	-	Zone 1 inside tank Classified due to API RP 505 Fig.90
TQ-5335509S	N0. 9 WATER BALLAST TANK (SB)	HULL	Water	3991.548 m³	Design max: 80 °C;	Design max: 0.076 kgf/cm^2; Design min: -0.07 kgf/cm^2;	Mechanical	-	-	-	INSIDE TANK	-	-	Zone 1 inside tank Classified due to API RP 505 Fig.90
TQ-5335510P	FWD PEAK TANK (PS)	HULL	Water	16258.3 m³	Design max: 80 °C;	Design max: 0.076 kgf/cm^2; Design min: -0.07 kgf/cm^2;	Mechanical	-	-	-	INSIDE TANK	-	-	Zone 1 inside tank Classified due to API RP 505 Fig.90
TQ-5335510S	FWD PEAK TANK (SB)	HULL	Water	16258.3 m³	Design max: 80 °C;	Design max: 0.076 kgf/cm^2; Design min: -0.07 kgf/cm^2;	Mechanical	-	-	-	INSIDE TANK	-	-	Zone 1 inside tank Classified due to API RP 505 Fig.90

AREA CLASSIFICATION DATA LIST (HULL) TABLE
(I-LI-3010.2G-5400-940-KES-301_0 - ANNEX)

EQUIPMENT			FLAMMABLE MATERIAL	CAPACITY	TEMPERATURE	PRESSURE	VENTILATION	SOURCE OF LEAKAGE		HORIZONTAL DISTANCE (m)			TEMPERATURE CLASS AND GROUP	REMARKS
TAG	DESCRIPTION	LOCATION						DESCRIPTION	GRADE	ZONE 0	ZONE 1	ZONE 2		
TQ-5336506S	SLOP TANK-SB (CLEAN SLOP)	HULL	Crude Oil	8370.3 m³	Design max: 80 °C;	Design max: 0.24 kgf/cm^2; Design min: -0.07 kgf/cm^2;	Mechanical	-	-	INSIDE TANK	-	-	-	Zone 0 inside tank Classified due to API RP 505 Fig.90
TQ-5336506P	SLOP TANK-PS (DIRTY SLOP)	HULL	Crude Oil	8370.3 m³	Design max: 80 °C;	Design max: 0.24 kgf/cm^2; Design min: -0.07 kgf/cm^2;	Mechanical	-	-	INSIDE TANK	-	-	-	Zone 0 inside tank Classified due to API RP 505 Fig.90
TQ-UC-UG-5261501	START UP AIR COMPRESSOR DIESEL TANK FOR EMERGENCY GENERATOR	POOP DECK	Diesel	(See General Note 5.16)	Design max: 60 °C;	Design max: 0.476 kgf/cm^2; Design min: -0.07 kgf/cm^2;	Natural	Vent	Primary	-	-	Vent R =0.5 m	T3, Group IIA	Diesel to be used is Marine Diesel Fuel. However, its vent shall be classified as per API RP 505 - item 8.2.1.3
TQ-UG-5261501	EMERGENCY GENERATOR DIESEL DAILY TANK	POOP DECK	Diesel	14.88 m³	Oper max: 60 °C; Design max: 60 °C; Design tube max: 60 °C;	Design max: 0.476 kgf/cm^2; Design min: -0.07 kgf/cm^2; Design tube max: 0.476 kgf/cm^2;	Natural	Vent	Primary	-	-	Vent R =0.5 m	T3, Group IIA	Diesel to be used is Marine Diesel Fuel. However, its vent shall be classified as per API RP 505 - item 8.2.1.3
TQ-UG-5262501	AUXILIARY GENERATOR DIESEL DAILY TANK	POOP DECK	Diesel	14.88 m³	Design max: 60 °C;	Design max: 0.476 kgf/cm^2; Design min: -0.07 kgf/cm^2;	Natural	Vent	Primary	-	-	Vent R =0.5 m	T3, Group IIA	Diesel to be used is Marine Diesel Fuel. However, its vent shall be classified as per API RP 505 - item 8.2.1.3
TQ-Z-5312502	GREASE TRAP	ENGINE ROOM	-	(See General Note 5.16)	Design max: 60 °C;	Design max: 1.136 kgf/cm^2; Design min: -0.07 kgf/cm^2;	Mechanical	-	-	-	-	-	-	
UC-5138501	AUXILIARY GENERATOR START UP AIR COMPRESSOR UNIT	ENGINE ROOM	Air	3.5 m³/h	(See General Note 5.16)	(See General Note 5.16)	Mechanical	-	-	-	-	-	-	Fluid not flammable.
UM-5121501A/B	POTABLE WATER MAKER	ENGINE ROOM	Water	(See General Note 5.16)	(See General Note 5.16)	(See General Note 5.16)	Mechanical	-	-	-	-	-	-	Fluid not flammable.
V-5125501A/B	CALORIFIER WATER VESSEL	ENGINE ROOM	Water	6.3 m³	Design max: 80.00 °C;	Design max: 7.28 kgf/cm^2;	Mechanical	-	-	-	-	-	-	Fluid not flammable.
VT-GG-5241501A/B	INERT GAS GENERATOR BLOWER	FORECASTLE	Air	9000 m³/h	Design max: 80 °C;	Design max: 0.25 kgf/cm^2; Design min: -0.1 kgf/cm^2;	Mechanical	-	-	-	-	-	-	Fluid not flammable.
Z-5115501	FRESH WATER HYDROPHORE UNIT	ENGINE ROOM	Water	80 m³/h	Design max: 70 °C;	Design max: 1226 kPag;	Mechanical	-	-	-	-	-	-	Fluid not flammable.
Z-5121501A/B	ULTRAVIOLET STERILIZER UNIT	ENGINE ROOM	Water	3.5 m³/h	Design max: 60 °C;	Design max: 10.2 kgf/cm^2; Design min: 9999 kgf/cm^2;	Mechanical	-	-	-	-	-	-	Fluid not flammable.
Z-5133504	REFUELING DRAIN TANK	MAIN DECK	QAV	0.5 m³	Design max: 60 °C;	Design max: 3.5 kgf/cm^2; Design min: 9999 kgf/cm^2;	Natural	Flanges, nozzles, valves	Secondary	-	-	3.0 m	T3, Group IIA	API RP 505 - item 14.3.2
BT-UG-5262501-02	AUXILIARY GENERATOR STARTING BATTERY	POOP DECK	Hydrogen	50 Ah	(See General Note 5.16)	(See General Note 5.16)	Mechanical	-	-	-	-	-	-	See general notes 5.4
BT-5265501A/B	DC EMERGENCY LOADS BATTERY 220VDC	ACCOMMODATION	Hydrogen	1000Ah	(See General Note 5.16)	(See General Note 5.16)	Mechanical	Vent	Primary	-	Whole compartment	-	T1, Group IIC	See General Note 5.4
BT-5263502	NAVIGATION AID SYSTEM BATTERY 125VDC	ACCOMMODATION	Hydrogen	400Ah	(See General Note 5.16)	(See General Note 5.16)	Mechanical	Vent	Primary	-	Whole compartment	-	T1, Group IIC	See General Note 5.4
BT-UG-5261501-02	EMERGENCY GENERATOR STARTING BATTERY	POOP DECK	Hydrogen	50 Ah	(See General Note 5.16)	(See General Note 5.16)	Mechanical	-	-	-	-	-	-	See General Note 5.4
BT-UG-5261501-01	EMERGENCY GENERATOR CONTROL BATTERY	POOP DECK	Hydrogen	150 Ah	(See General Note 5.16)	(See General Note 5.16)	Mechanical	-	-	-	-	-	-	See General Note 5.4
BT-5264501	BATTERY BANK FOR PAGA "A"	ACCOMMODATION	Hydrogen	1,68E+05 W	(See General Note 5.16)	(See General Note 5.16)	Mechanical	Vent	Primary	-	Whole compartment	-	T1, Group IIC	See General Note 5.4
BT-5264502	BATTERY BANK FOR PAGA "B"	ACCOMMODATION	Hydrogen	1,68E+05 W	(See General Note 5.16)	(See General Note 5.16)	Mechanical	Vent	Primary	-	Whole compartment	-	T1, Group IIC	See General Note 5.4
BT-5264503	BATTERY BANK FOR -48 VDC	ACCOMMODATION	Hydrogen	1,68E+05 W	(See General Note 5.16)	(See General Note 5.16)	Mechanical	Vent	Primary	-	Whole compartment	-	T1, Group IIC	See General Note 5.4

AREA CLASSIFICATION DATA LIST (HULL) TABLE
(I-LI-3010.2G-5400-940-KES-301_0 - ANNEX)

EQUIPMENT			FLAMMABLE MATERIAL	CAPACITY	TEMPERATURE	PRESSURE	VENTILATION	SOURCE OF LEAKAGE		HORIZONTAL DISTANCE (m)			TEMPERATURE CLASS AND GROUP	REMARKS
TAG	DESCRIPTION	LOCATION						DESCRIPTION	GRADE	ZONE 0	ZONE 1	ZONE 2		
BT-5264504	BATTERY BANK FOR -48 VDC TRANSMISSION SYSTEM	ACCOMMODATION	Hydrogen	8,00E+03 W	(See General Note 5.16)	(See General Note 5.16)	Mechanical	Vent	Primary	-	Whole compartment	-	T1, Group IIC	See General Note 5.4
BT-5264505	BATTERY BANK FOR 24 VDC ACTIVE REPEATER	ACCOMMODATION	Hydrogen	8,00E+03 W	(See General Note 5.16)	(See General Note 5.16)	Mechanical	Vent	Primary	-	Whole compartment	-	T1, Group IIC	See General Note 5.4
BT-5264506	BATTERY BANK FOR 24 VDC GMDSS	ACCOMMODATION	Hydrogen	8,00E+03 W	(See General Note 5.16)	(See General Note 5.16)	Mechanical	Vent	Primary	-	Whole compartment	-	T1, Group IIC	See General Note 5.4
BT-5264507	BATTERY BANK FOR 24 VDC OPERATIONAL RADIO	ACCOMMODATION	Hydrogen	8,00E+03 W	(See General Note 5.16)	(See General Note 5.16)	Mechanical	Vent	Primary	-	Whole compartment	-	T1, Group IIC	See General Note 5.4
FT-5336001A/B	NON CLASSIFIED AREA - OPEN DRAIN - FILTER	MAIN DECK	Water	Design max flow rate: 680 m³/h;	Design max: 70 °C;	Design max: 345 kPa-g; Design min: 345 kPa-g;	Natural	-	-	-	-	-	-	Fluid not flammable. However, as per General Note 5.15, this equipment is located in main deck, which is Zone 1.
TQ-5336001	OPEN DRAIN TANK - NON CLASSIFIED AREA	MAIN DECK	Water	Volume (total): 3.8 m³;	Design max: 70 °C;	Design max: 345 kPa-g;	Natural	-	-	-	-	-	-	Fluid not flammable. However, as per General Note 5.15, this equipment is located in main deck, which is Zone 1.
Z-1359502	OFFLOADING SYSTEM (AFT)	MAIN DECK	Stabilized Crude Oil	7200.0 m³/h	Design max: 70 °C;	Design max: 300 psi (21 bar)	Natural	Flanges, nozzles, valves	Secondary	-	-	3,0 m	T3, Group IIA	API RP 505 - item 8.2.5
Z-1359506	OFFLOADING SYSTEM (FWD)	FORECASTLE	Stabilized Crude Oil	7200.0 m³/h	Design max: 70 °C;	Design max: 300 psi (21 bar)	Natural	Flanges, nozzles, valves	Secondary	-	-	3,0 m	T3, Group IIA	API RP 505 - item 8.2.5
Z-5125501	CALORIFIER UNIT	ENGINE ROOM	Water	(See General Note 5.16)	(See General Note 5.16)	(See General Note 5.16)	Mechanical	-	-	-	-	-	-	Fluid not flammable.
Z-GG-5241501A/B	VENTILATED FUEL GAS SUPPLY CABINET	FORECASTLE	Gas	629 kg/h	Design max: 92 °C;	Design max: 5 kgf/cm^2; Design min: 9999 kgf/cm^2;	Mechanical	Vent	Primary	R = 0,5 m around vent	R = 1,5 m around vent	R = 3,0 m around vent	T3, Group IIA	API RP 505 - item 8.2.3.3.1
AFT Paint Shop	-	ACCOMMODATION	Paint and Solvent	-	-	-	Mechanical	air outlet, doors	Primary	-	Whole compartment	3m from the door opennig	T3, Group IIB	See General Note 5.17 and 5.18
FWD Paint Shop	-	FORECASTLE	Paint and Solvent	-	-	-	Mechanical	air outlet, doors	Primary	-	Whole compartment	3m from the door opennig	T3, Group IIB	See General Note 5.17 and 5.18
AFT Paint Store	-	ACCOMMODATION	Paint and Solvent	-	-	-	Mechanical	-	-	-	-	-	-	See General Note 5.19
FWD Paint Store	-	FORECASTLE	Paint and Solvent	-	-	-	Mechanical	air outlet, doors	Primary	-	Whole compartment	3m from the door opennig	T3, Group IIB	See General Note 5.17 and 5.18
Vent pipe	Vent for Inert Gas Generator Package	-	Gas	(See General Note 5.16)	(See General Note 5.16)	(See General Note 5.16)	Natural	Vent	Primary	-	R = 1.5 m around vent	R = 3.0 m around vent	T3, Group IIA	API RP 505 - item 8.2.1.1.1
Vent pipe	Vent Post	-	Gas	(See General Note 5.16)	(See General Note 5.16)	(See General Note 5.16)	Natural	Vent	Primary	R = 1.0 m around vent	R = 3.0 m around vent	R = 6.0 m around vent	T3, Group IIA	API RP 505 - Figure 90.
Vent pipe	Vent for SLOP VESSEL V-5336501	-	Gas	(See General Note 5.16)	(See General Note 5.16)	(See General Note 5.16)	Natural	Vent	Primary	R = 0,5 m around vent	R = 1,5 m around vent	R = 3,0 m around vent	T3, Group IIA	API RP 505 - item 8.2.3.3.1
Vent pipe	Vents from Structural Tanks Classified as Zone-1 inside	HULL	Oil / gas	-	-	-	Mechanical	Vent, hatches	Primary	-	R = 1,5 m around vent	R = 3,0 m around vent	T3, Group IIA	Areas containing discharges of ventilation vents originating in Zone 1 areas shall be classified as per API RP 505 - Figure 87.
B-5420502A/B	FIRE WATER JOCKEY PUMP	ENGINE ROOM	Water	Design max flow rate: 20 m³/h;	Oper normal: 27.00 °C; Design max: 57.20 °C;	Design max: 10.00 barg; Differential pressure: 7.00 barg;	Mechanical	-	-	-	-	-	-	Fluid not flammable.
B-UB-5420501A/C-01	FIRE WATER LIFT PUMP	LIFEBOAT PLATFORM	Water	Design max flow rate: 2200 m³/h;	Oper normal: 27.00 °C; Design max: 57.00 °C; Design min: 21.00 °C;	(See General Note 5.16)	Natural	-	-	-	-	-	-	Fluid not flammable.
B-UB-5420501A/C-02	FIRE WATER BOOSTER PUMP	LIFEBOAT PLATFORM	Water	Design max flow rate: 2200 m³/h;	Oper normal: 27.00 °C; Design max: 57.00 °C; Design min: 21.00 °C;	(See General Note 5.16)	Natural	-	-	-	-	-	-	Fluid not flammable.
B-Z-5424501-A/B	FOAM CONCENTRATE PUMP	ENGINE ROOM	Water	Design max flow rate: 40.7 m³/h;	Oper normal: 25.00 °C; Design max: 55.00 °C; Design min: 21.00 °C;	Design max: 15 barg; Differential pressure: 10.8 barg;	Mechanical	-	-	-	-	-	-	Fluid not flammable.
TQ-UB-5420501A/C	FWPU DIESEL DAILY TANK	LIFEBOAT PLATFORM	Diesel	(See General Note 5.16)	Design max: 50 °C;	Design max: 101.325 kPa; Design min: 101.325 kPa;	Natural	Vent	Primary	-	-	Vent R =0.5 m	T3, Group IIA	Diesel to be used is Marine Diesel Fuel. However, its vent shall be classified as per API RP 505 - item 8.2.1.3

AREA CLASSIFICATION DATA LIST (HULL) TABLE
(I-LI-3010.2G-5400-940-KES-301_0 - ANNEX)

EQUIPMENT			FLAMMABLE MATERIAL	CAPACITY	TEMPERATURE	PRESSURE	VENTILATION	SOURCE OF LEAKAGE		HORIZONTAL DISTANCE (m)			TEMPERATURE CLASS AND GROUP	REMARKS
TAG	DESCRIPTION	LOCATION						DESCRIPTION	GRADE	ZONE 0	ZONE 1	ZONE 2		
TQ-5300509	DOUBLE BOTTOM VOID	ENGINE ROOM	Air	1551.31 m³	Design max: 80 °C;	Design max: 0.076 kgf/cm^2; Design min: -0.07 kgf/cm^2;	Mechanical	-	-	-	-	-	-	Fluid not flammable.
TQ-5310501	GRAY WATER HOLDING TANK	ENGINE ROOM	Water	15 m³	Design max: 60 °C;	Design max: 0.596 kgf/cm^2; Design min: -0.07 kgf/cm^2;	Mechanical	-	-	-	-	-	-	Fluid not flammable.